Multi-volt Dot LED License Lamp Family

Data Sheet

LICENSE

Multi-volt lamps are identified by striped wire

PRODUCT SPECIFICATIONS

MATERIALS:
Round Lens: High Impact Acrylic
Rectangular Lens: Polycarbonate
Brackets: Polycarbonate

FINISH:
Black/Gray/Clear

FMVSS:
L

ECE:
R4

VOLTAGE AMP:
Multi-volt, 9V-32V / 0.3A

BRACKETS:
43960, 43962, 42162, 94350, 43780, 43783, 43850

GROMMETS:
94360 Hooded

REPLACEMENT LAMPS:
60651 Round Lamp, 60671 Rectangular Lamp

Multi-volt LED Dot License Lamp Family Provides Solutions for a Wide Range of Power Systems

- Durable one-piece LED lamp design
- Hardwired with .180 slim-line UBS connections for maximum performance
- Black stripe on white wire will distinguish multi-volt from 12 volt products
- Solutions for both vertical and horizontal mounting surfaces
- Also works as an indicator or as a step and compartment lighting

PART NUMBER	DESCRIPTION	CASE QUANTITY
60651	Round Dot, lamp only	12 pcs
60661	Round Dot w/ 94350 bracket	12 pcs
60671	Rectangular Dot, lamp only	12 pcs
60681	Rectangular Dot w/43960 bracket	12 pcs
60691	Rectangular Dot w/42162 bracket	12 pcs
60701	Rectangular Dot w/43962 bracket	12 pcs
60711	Round Dot w/ 94350 & 43780 brackets	12 pcs
60721	Round Dot w/94360 hooded grommet	12 pcs
60791	Round Dot w/42322 bracket	12 pcs
60781	Round Dot w/42332 bracket	12 pcs
60861	Round Dot w/94360 Hooded Grommet and Deutsch Connector	12 pcs

2600 Lanier Drive, Madison, Indiana U.S.A. 47250-0550
U.S. **800.628.0809** Canada **800.268.5612**
Europe **+49 9422 40331-0** Mexico **+(52) 818262 4412** China **+86.21.5774.9633**
grote.com

GLB2017-048

Multi-volt Dot LED License Lamp Family

Data Sheet

LICENSE

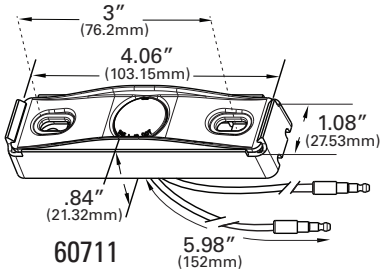

60711

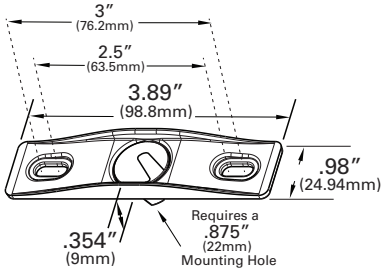

60661

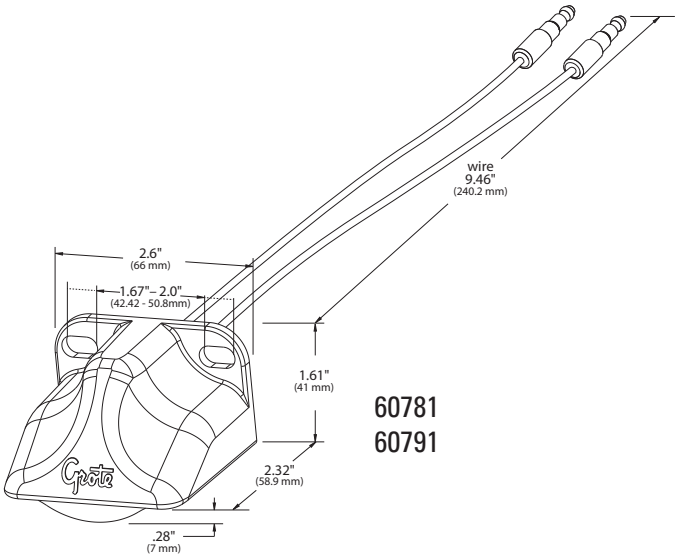

60781
60791

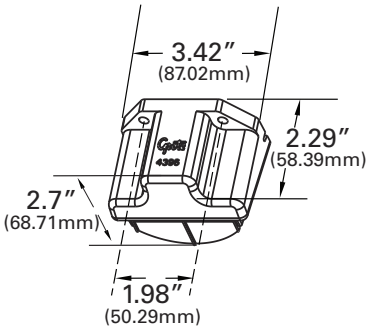

60681
60701

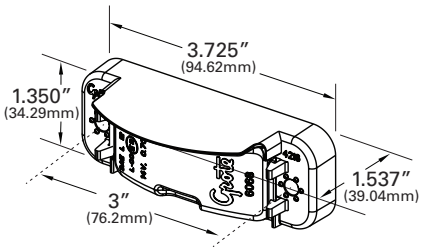

60691

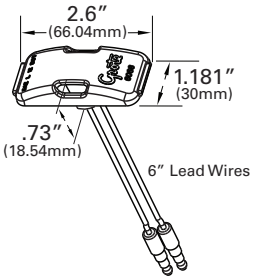

60671

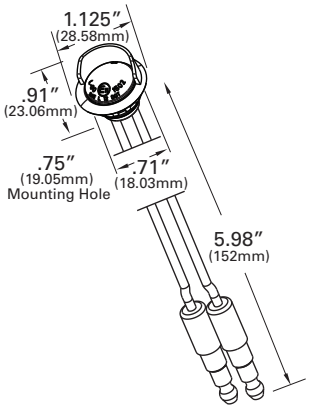

60721

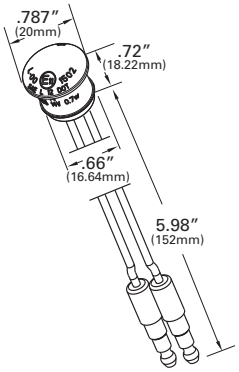

60651

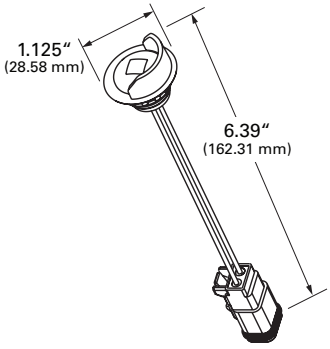

60861

2600 Lanier Drive, Madison, Indiana U.S.A. 47250-0550

U.S. **800.628.0809** Canada **800.268.5612**

Europe **+49 9422 40331-0** Mexico **+(52) 818262 4412** China **+86.21.5774.9633**

grote.com